Rewarding Learning

Centre Number

Candidate Number

General Certificate of Secondary Education
2023

GCSE Physics

Unit 1

Higher Tier

GPY12

[GPY12]

THURSDAY 25 MAY, MORNING

TIME

1 hour 30 minutes.

INSTRUCTIONS TO CANDIDATES

Write your Centre Number and Candidate Number in the spaces provided at the top of this page.
You must answer the questions in the spaces provided.
Do not write outside the boxed area on each page or on blank pages.
Complete in black ink only. **Do not write with a gel pen.**
Answer **all** questions.

INFORMATION FOR CANDIDATES

The total mark for this paper is 100.
Figures in brackets printed down the right-hand side of pages indicate the marks awarded to each question or part question.
Quality of written communication will be assessed in Question **4(a)**.

13457

28GPY1201

1 **(a)** The diagram below shows a car moving around a race track.
Its velocity is shown at two points.
It has the same speed at the two points.

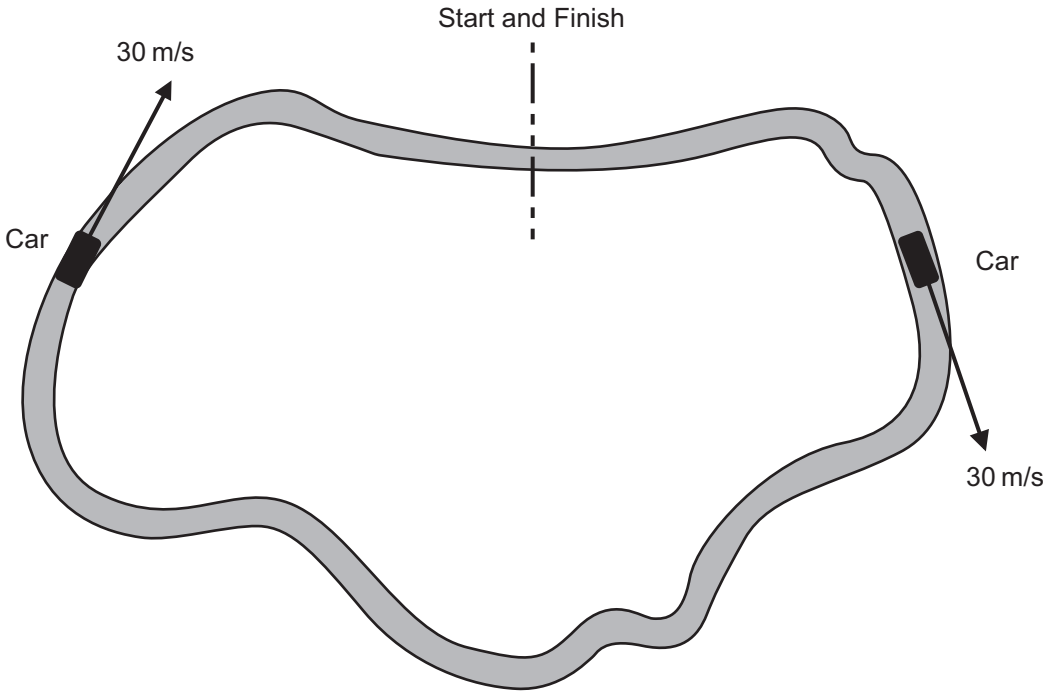

Source: Chief Examiner

(i) Explain why its velocity at these two points is different.

_____

_____ [1]

(ii) The car completes a full lap.
Explain with the help of an equation why its average velocity for the complete lap is zero.

_____

_____ [2]

(b) (i) The driver of a car takes a short time to react to a hazard on the road. During this time the car travels at a constant speed.

The diagram below shows the distance the car travels before the driver applies the brakes.
Once the brakes are applied the car eventually stops.

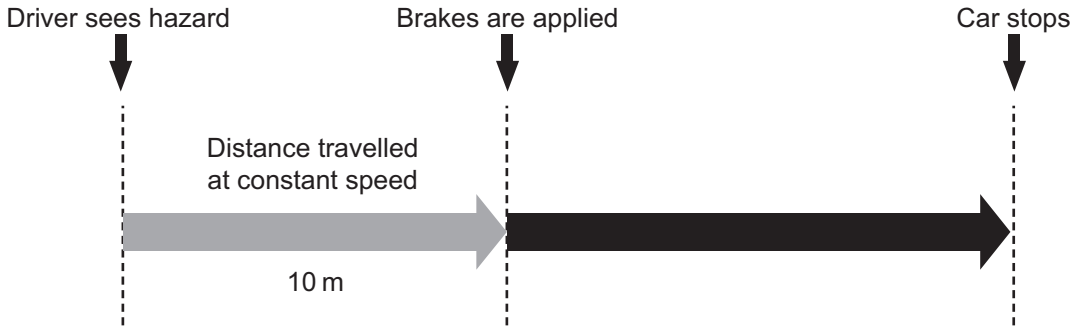

Source: Chief Examiner

The time between seeing the hazard and applying the brakes is 0.5 s.
Calculate the constant speed of the car during this time.
Show clearly how you get your answer, starting with the equation you plan to use.

Constant speed of the car = _____ m/s [3]

[Turn over

(ii) Calculate the average speed of the car from the moment the driver applies the brakes until the car stops.
Show clearly how you get your answer, starting with the equation you plan to use.

Average speed = _____ m/s [3]

(c) In some countries speed limits are stated in km/h.
Show that a speed limit of 80 km/h is equal to 22.2 m/s.

[3]

(d) The distance–time graph below shows the journey of a train as it moves from one stop to the next.

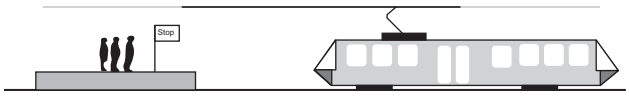

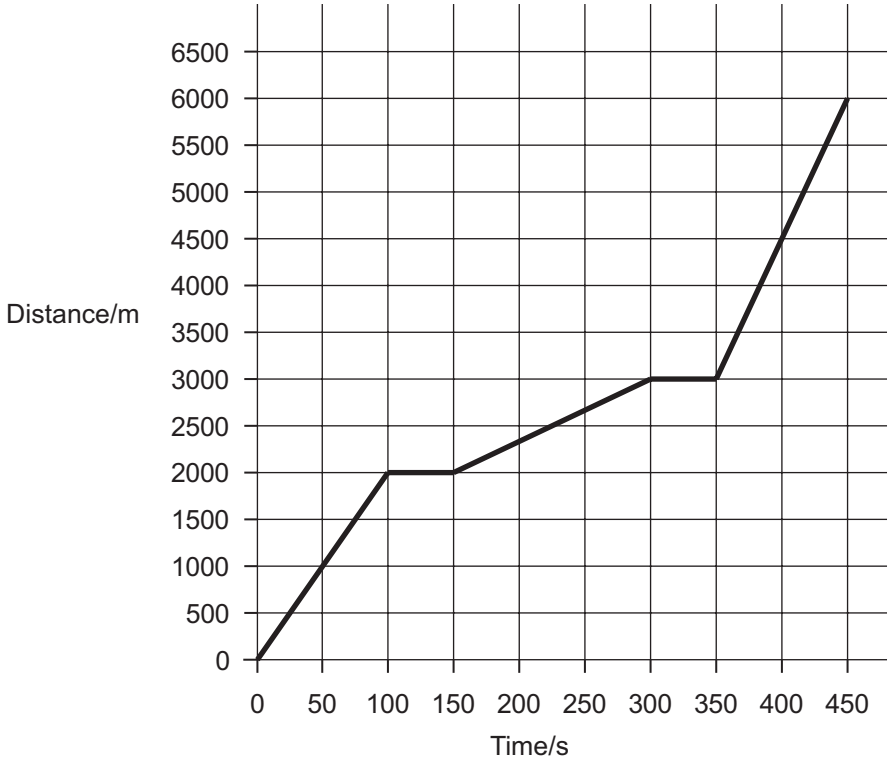

Source: Chief Examiner

(i) Calculate the **average speed** of the train for the complete journey shown. **Show clearly how you get your answer, starting with the equation you plan to use.**

Average speed = _____ m/s [3]

(ii) Between which two times is the train **moving with the slowest speed**? What feature on the graph shows this?

Times between _____ s and _____ s

Feature _____

_____ [2]

[Turn over

(e) A **drop tower** is a type of amusement ride. Passengers are lifted to the top of a tall tower, then released to drop down the tower.
Brakes rapidly slow the car and passengers as they approach the bottom of the ride.

Source: © Getty Images

The velocity–time graph for the amusement ride is shown below.

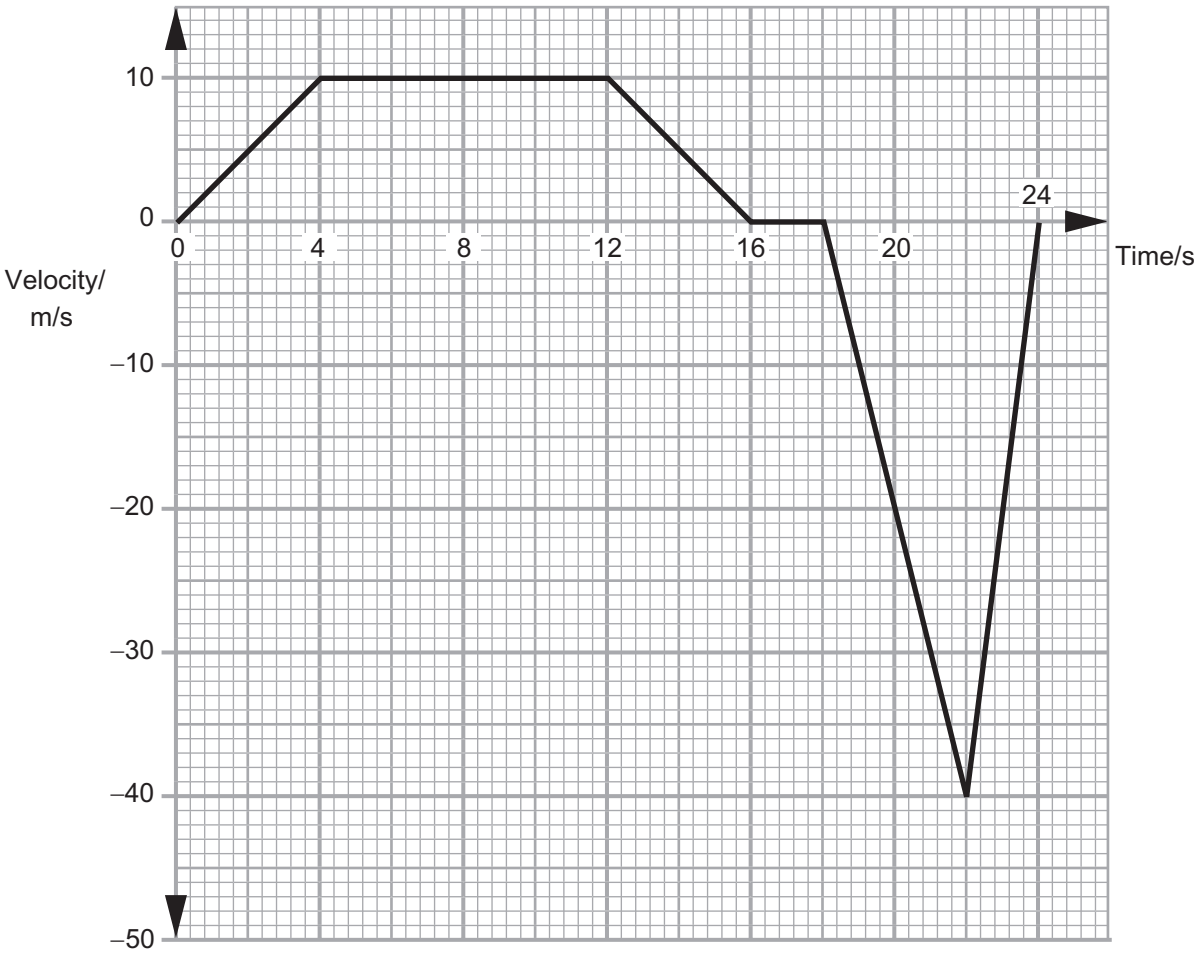

Source: Chief Examiner

13457

(i) It takes 16 s for the passengers to rise from the ground to the top of the tower. Using the graph, calculate the height of the tower.
Show clearly how you get your answer.

Height of tower = _____ m [5]

(ii) At what time are the passengers released to drop?

Time = _____ s [1]

(iii) As the car falls the brakes are applied.
At what time does this happen?

Time = _____ s [1]

(iv) Calculate the **acceleration** of the car carrying the passengers in the last two seconds of the motion.
Show clearly how you get your answer, starting with the equation you plan to use.

Acceleration = _____ m/s^2 [3]

[Turn over

2 The diagram below shows a helicopter and the forces acting on it.
The helicopter is rising vertically.

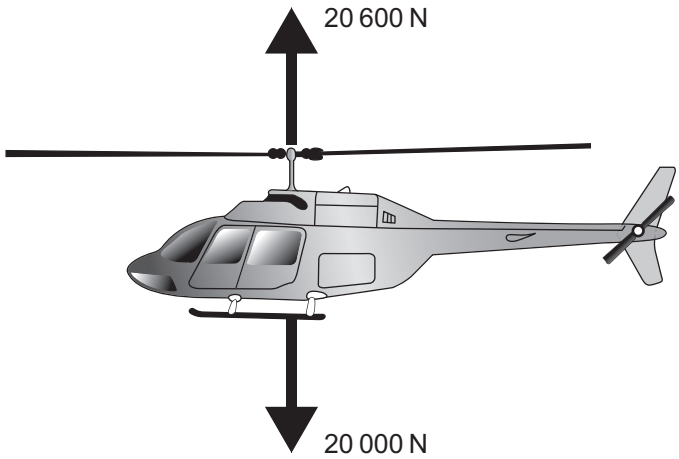

Source: Chief Examiner

(a) (i) Calculate the size of the resultant force on the helicopter and state its direction.

Resultant force = _____ N

Direction = _____ [2]

(ii) The helicopter has a mass of 1500 kg.
Calculate the helicopter's acceleration.
Show clearly how you get your answer, starting with the equation you plan to use.

Acceleration = _____ m/s^2 [3]

(b) A 6 N weight and a box are attached to a metre rule as shown below. Their positions on the rule were adjusted until the rule was balanced.

Using the Principle of Moments calculate the weight of the box.
Show clearly how you get your answer, starting with the equation you plan to use.

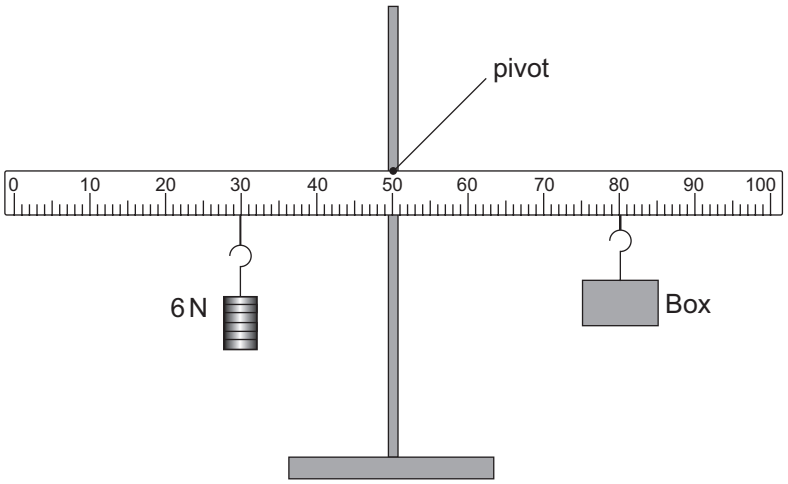

Source: Chief Examiner

Weight of the box = _____ N [4]

[Turn over

(c) (i) State Hooke's Law.

_____

_____

_____ [2]

Three identical springs are hung from a support as shown below.
Forces of 3 N and 5 N are attached to the springs.

The springs stretch to the lengths shown.

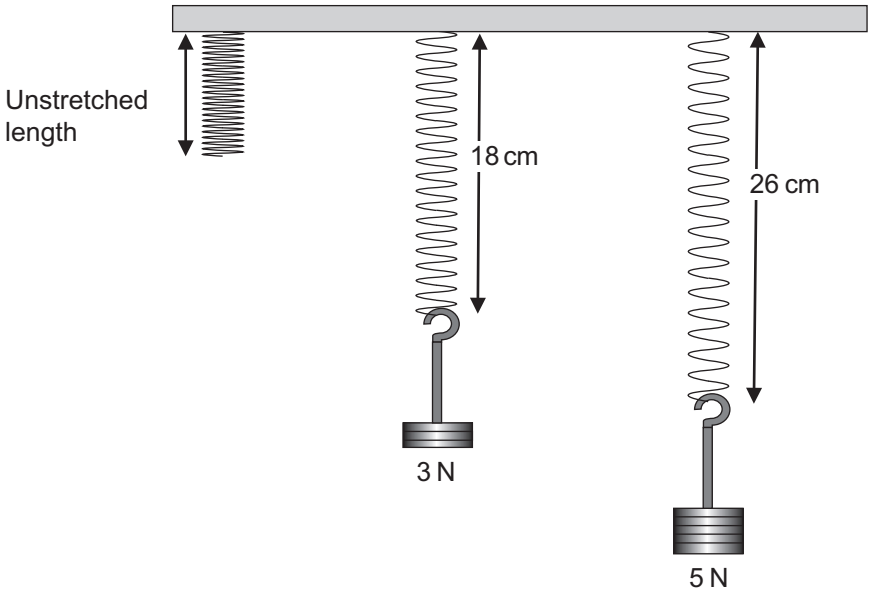

Source: Chief Examiner

(ii) Using the values shown on the diagram, calculate the **extension** a force of 1 N would produce.
Show clearly how you get your answer.

Extension produced by 1 N = _____ cm [2]

13457

(iii) Calculate the spring constant for the spring shown opposite.
Include the unit of spring constant with your answer.
Show clearly how you get your answer, starting with the equation you plan to use.

Spring constant = _____

Unit = _____ [4]

[Turn over

(d) Rubber suction caps are often used to fix cameras to the windscreen of cars as shown below. Air pressure pushing on the suction cap holds it on the windscreen.

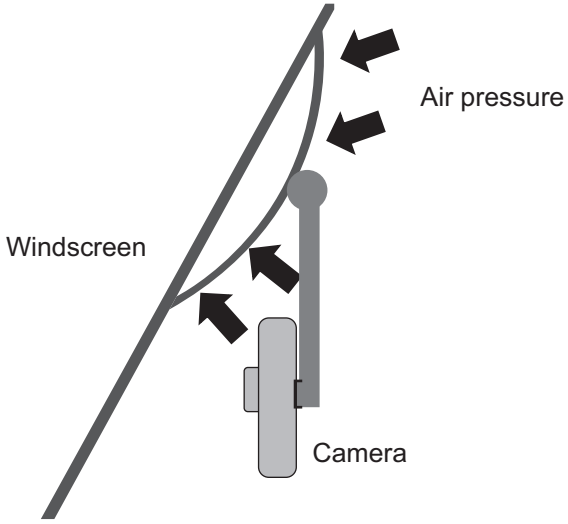

Source: Chief Examiner

The area of the suction cap is 25 cm^2.
Air pressure is 10 N/cm^2.
Calculate the force holding the suction cap to the windscreen.
Show clearly how you get your answer, starting with the equation you plan to use.

Force = _____ N [3]

BLANK PAGE

DO NOT WRITE ON THIS PAGE

(Questions continue overleaf)

3 **(a)** Lead has a density of 11.3 g/cm^3 and wood has a density of 0.6 g/cm^3.

A 1 kg cube of lead and a 1 kg cube of wood are each wrapped in brown paper and set on a bench.
Without touching them, how would you know which one is wood?

_____

_____

_____ [1]

(b) The kinetic theory of matter states that all matter is made up of particles.

(i) What does the theory state about the positions of the particles in a solid?

_____ [1]

(ii) What type of motion do the particles in a solid have?

_____ [1]

(iii) In liquids the particles can move around.
How does the structure of a liquid allow this to happen?

_____ [1]

(iv) In a gas, the particles can move freely and completely fill their container.
How does the kinetic theory explain this property?

_____ [1]

(c) A block of ice has the dimensions shown in the diagram below.

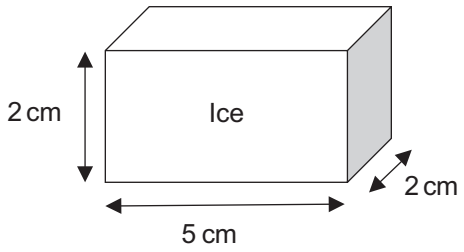

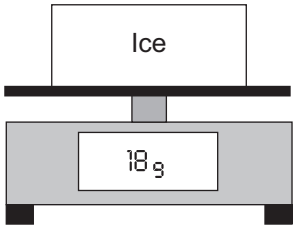

Source: Chief Examiner

The block of ice was then placed on a digital balance.
Using the information shown in the diagrams, calculate the density of ice.
Show clearly how you get your answer, starting with the equation you plan to use.

Density of ice = _____ g/cm^3 [5]

[Turn over

(d) The mass and volume of a number of blocks were measured.
The values were plotted on a grid as shown below.

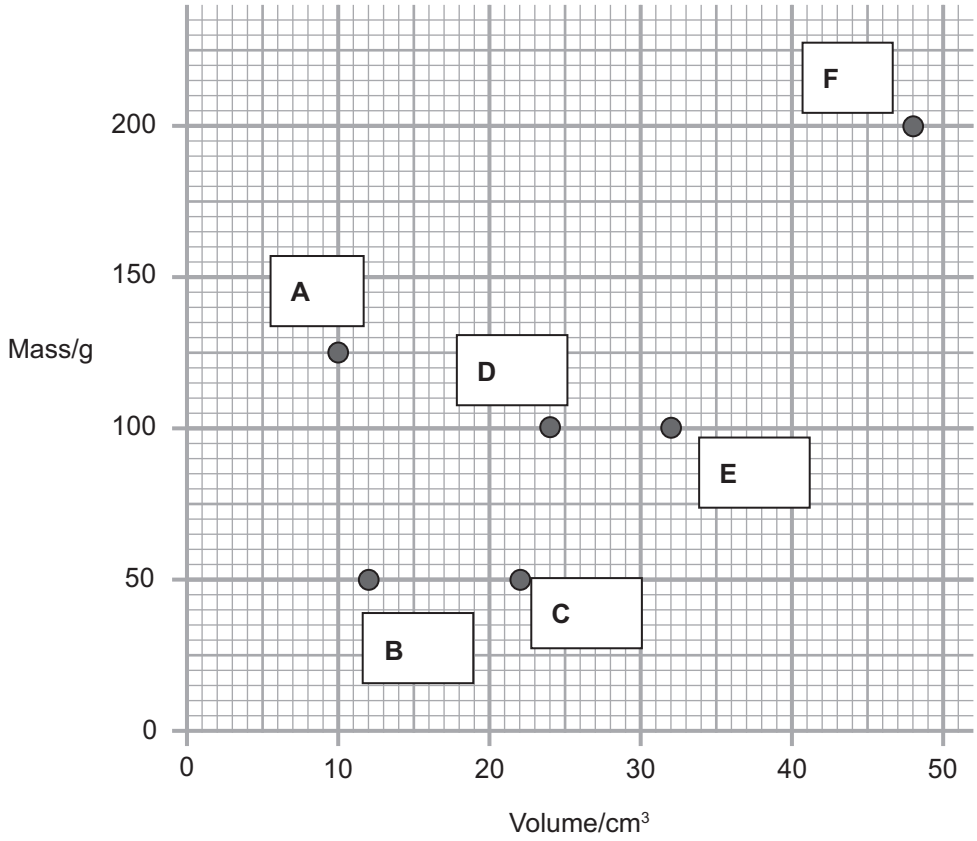

Source: Chief Examiner

Which blocks are made of the same material?
With reference to the graph, explain your answer.

_____

_____

_____ [2]

13457

4 **(a)** The diagram below shows the structure of the outside wall and window of most houses.
The diagram also shows a radiator attached to the inside of the wall. Heat from the metal radiator heats the room.
The large arrows show the direction of heat loss through the various parts of the room.

Heating our homes costs money. It is important that steps are taken to reduce the loss of heat from our homes. The diagram also shows some measures that are used to reduce heat loss.

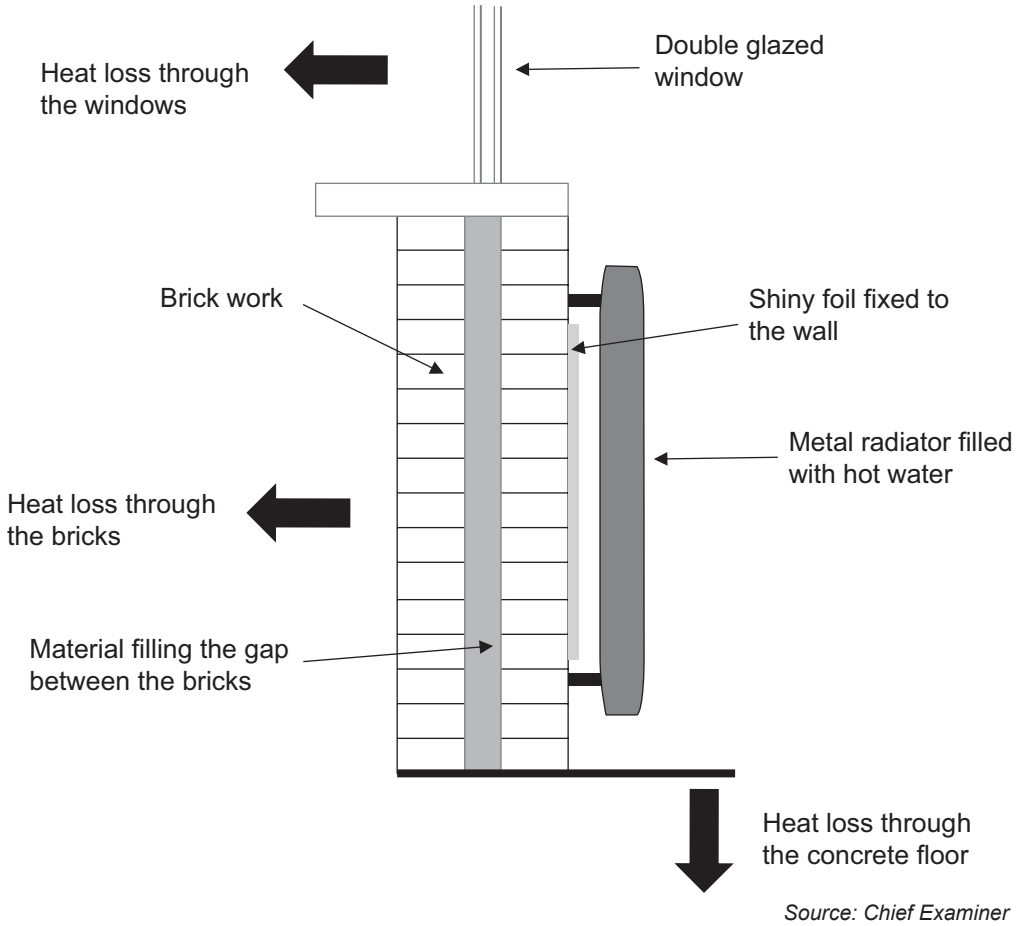

Source: Chief Examiner

[Turn over

In this question you will name the processes of heat transfer and describe how each is reduced by the various measures shown in the diagram.

In your answer you should:

- name the three methods by which heat is transferred;
- describe how the heat from hot water gets through the metal radiator and; name the particle responsible for this process;
- describe how heat is transferred throughout the room;
- explain the role the shiny foil placed behind the radiator plays in reducing heat loss from the room;
- name a material that is usually placed in the gap between the two layers of brick to reduce heat loss and state which method of heat transfer is reduced in this way;
- name the method of heat transfer reduced by using double glazing
- describe what could be done to reduce heat loss through the concrete floor;

In this question you will be assessed on your written communication skills including the use of specialist science terms.

Write your answers in the appropriate spaces on the next page.

13457

Methods of heat transfer _____

_____

How heat from hot water gets through the metal radiator and the particle responsible

_____

_____

How the room is heated _____

_____

_____

The role of the shiny foil _____

_____

_____

Cavity wall material and the method of heat transfer reduced _____

_____

_____

Heat transfer method reduced by double glazing _____

_____

_____

How heat loss is reduced through the concrete floor _____

_____ [6]

[Turn over

(b) A hydroelectric power station uses water from a dam to produce electricity. The water is allowed to flow down from the upper dam through a pipe and this moving water causes a turbine-generator to turn and produce electricity.

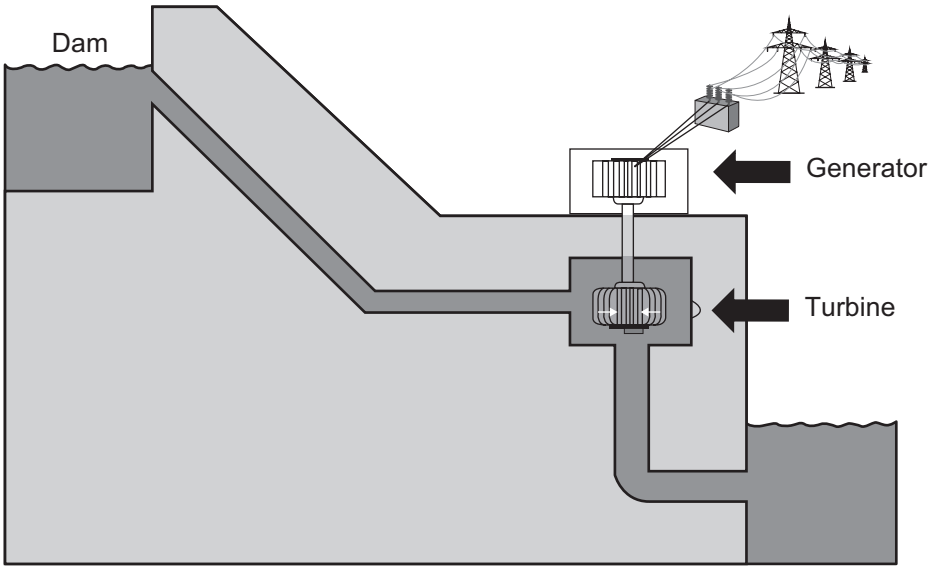

Source: Chief Examiner

(i) Complete the energy flow diagram for this type of power station. Write the names of the energy forms in the boxes.

_____ energy of the water in the upper dam

↓

_____ energy of the water in the pipe

↓

_____ energy of the rotating turbine

↓

_____ energy produced by the generator

Unwanted forms of energy are

_____

and

_____

[3]

(ii) Calculate the potential energy of 1000 kg of water in the upper dam which is 600 m above the turbine.
Show clearly how you get your answer, starting with the equation you plan to use.

Potential energy = _____ J [3]

(iii) Every second, 1000 kg of water flows down the pipe towards the turbine.
This provides the input power to the generator.
What is this input power?

Input power = _____ W

What is this input power in megawatts?

Input power = _____ MW [2]

(iv) The power station produces an output power of 4.0 MW.
Using your answer to part **(iii)** calculate the efficiency of the power station.
Show clearly how you get your answer, starting with the equation you plan to use.

Efficiency = _____ [3]

[Turn over

(c) A ball of mass 0.5 kg rolls down a slope.
The graph below shows how its potential energy E_p and its kinetic energy E_k change with distance rolled down the slope.

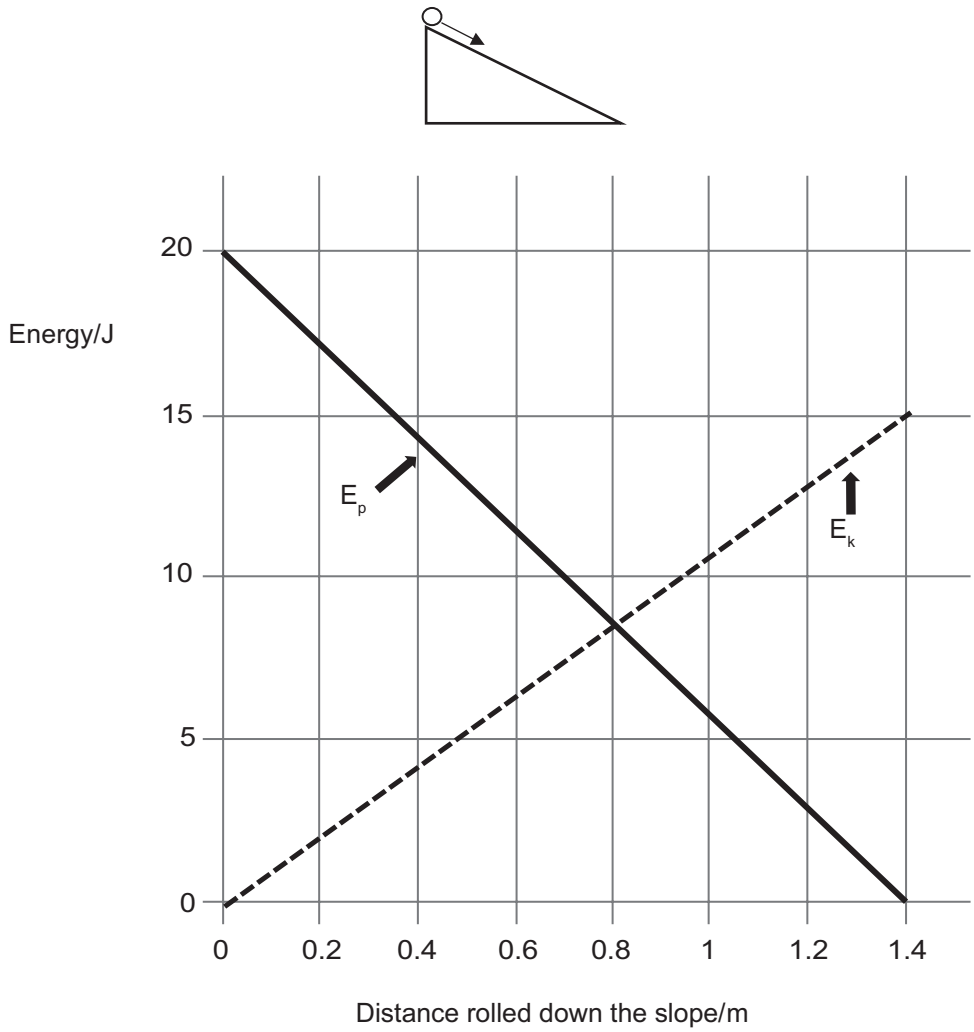

Source: Chief Examiner

(i) How much energy is lost due to friction between the ball and the slope?

Energy lost = _____ J [1]

(ii) The length of the slope is 1.4 m.
Calculate the friction force between the ball and the slope.
Show clearly how you get your answer, starting with the equation you plan to use.

Friction = _____ N [3]

(iii) Calculate the speed of the ball as it reaches the bottom of the slope.
Show clearly how you get your answer, starting with the equation you plan to use.

Speed = _____ m/s [4]

[Turn over

5 **(a)** The model of the atom that we use is based on the findings of a scattering experiment carried out over one hundred years ago. The diagram below shows the main features of the apparatus.

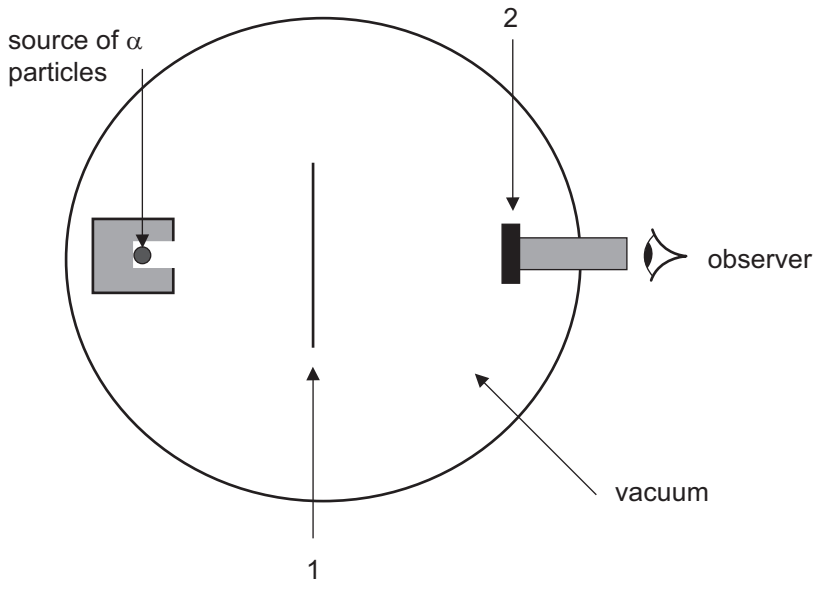

Source: Chief Examiner

(i) Name the parts numbered in the diagram.

1. _____

2. _____ [2]

(ii) Why was it necessary to have the apparatus inside a vacuum?

_____

_____ [1]

The diagram below illustrates the paths taken through the atoms of the target material by the alpha particles.

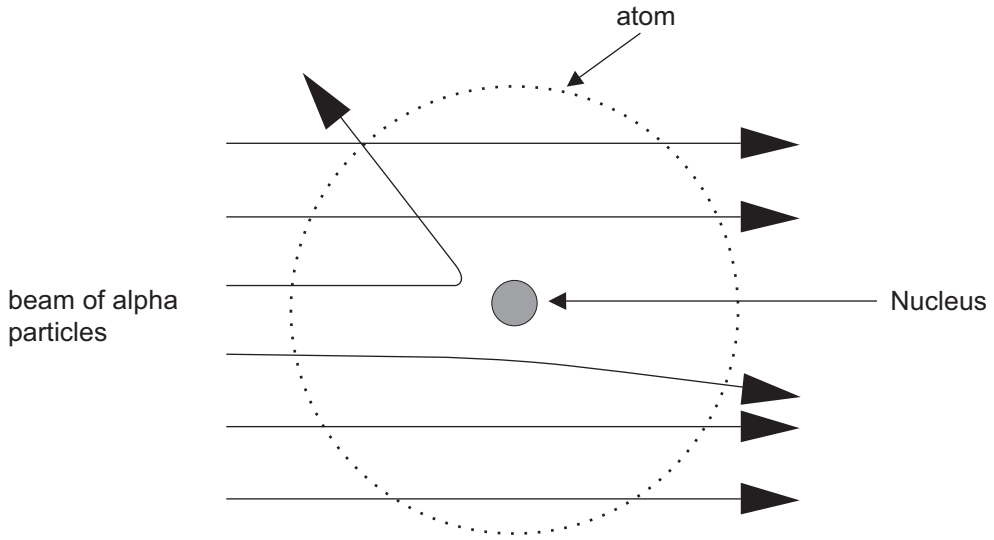

Source: Chief Examiner

(iii) Most of the alpha particles pass through the target material without being deflected. What does this tell you about the size of the nucleus of the atom?

_____ [1]

(iv) Some of the alpha particles are deflected by the nucleus.
What does this tell you about the electric charge of the nucleus?

_____ [1]

[Turn over

(b) (i) Complete the decay equation for radon shown below.

$$^{219}_{\square}\mathrm{Rn} \rightarrow {}^{\square}_{84}\mathrm{Po} + {}^{\square}_{\square}\mathrm{He}$$

[4]

(ii) When measuring the activity of a radioactive source, the value of the activity is corrected for background activity.
What is meant by background activity and how is it used to correct the measured activity?

_____

_____

_____ [2]

(iii) A sample of radon gas has a corrected activity of 2048 counts per second (cps).
After 11.4 days the corrected activity has decreased to 256 cps.
Calculate the half-life of radon.
Show clearly how you get your answer.

Half-life = _____ days [3]

Although radon is an inert gas, the radioactive decay of radon into other elements releases ionising radiations.
These ionising radiations are a danger to people who live in areas where rocks emit radon gas.

(iv) What is ionisation?

_____

_____

_____ [1]

(v) Explain why such radiation presents a danger to humans.

_____

_____

_____ [1]

THIS IS THE END OF THE QUESTION PAPER

DO NOT WRITE ON THIS PAGE

For Examiner's use only	
Question Number	Marks
1	
2	
3	
4	
5	
Total Marks	

Examiner Number

Permission to reproduce all copyright material has been applied for.
In some cases, efforts to contact copyright holders may have been unsuccessful and CCEA will be happy to rectify any omissions of acknowledgement in future if notified.